REV	DATE	DES	REVISION DESCRIPTION	CADD	CHK	RVW
0	11/18/13	XXX	REV_DESC	LJH	WHR	JML

10"x8"x16" Regular Weight CMU

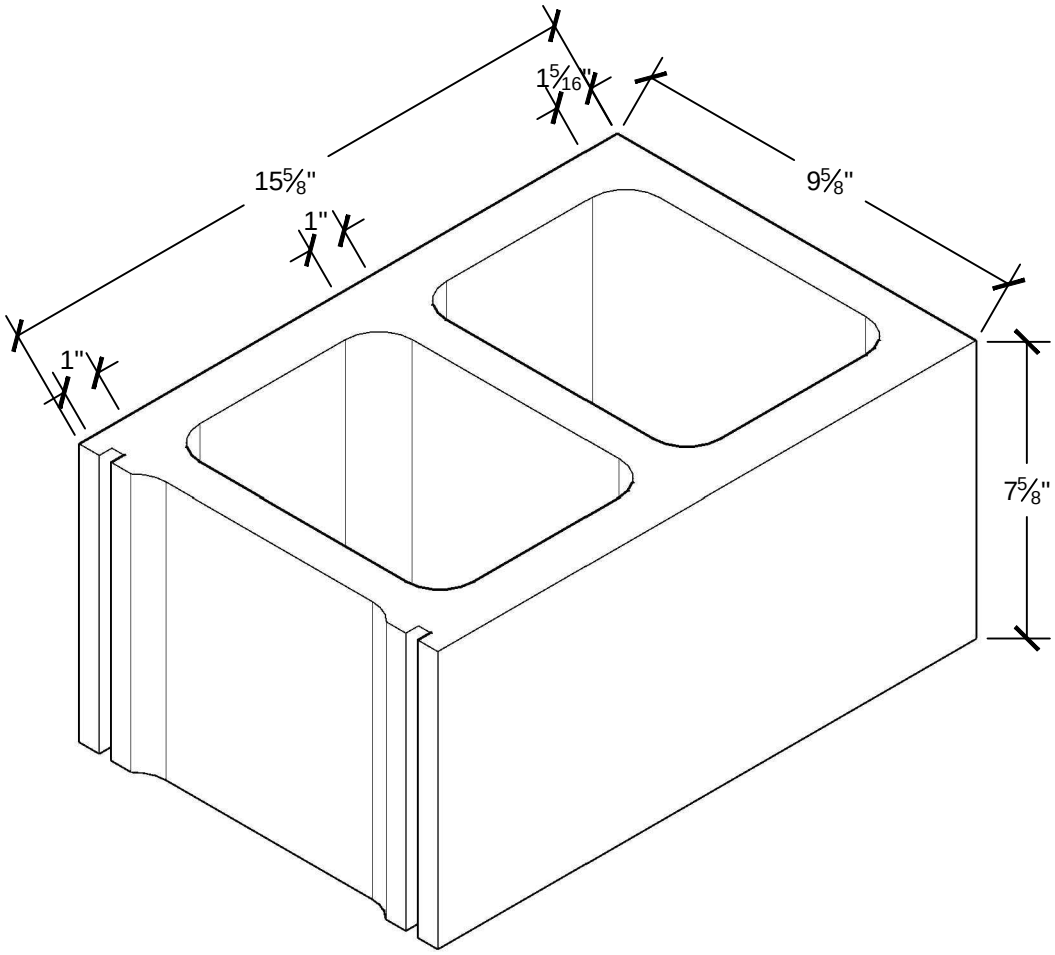

MEETS:

- ASTM C-90 FOR MASONRY UNITS

CROMWELL CONCRETE PRODUCTS INC.

PROJECT

TITLE
10x8x16 Regular Weight CMU

DESIGN	BGR	01/30/14	FILE No.
CADD	LJH	12/17/13	SCALE 3"=1'-0"
REVIEW	MF	02/01/16	REV. 0
PROJECT No.			

DRAWING: CMU-10x8x16-CONC