# Cromwell Concrete Products, Inc.

667 MAIN ST. • P.O. BOX 99 • CROMWELL, CT 06416
(860) 529-3417 • (860) 635-5146
FAX (860) 635-7469


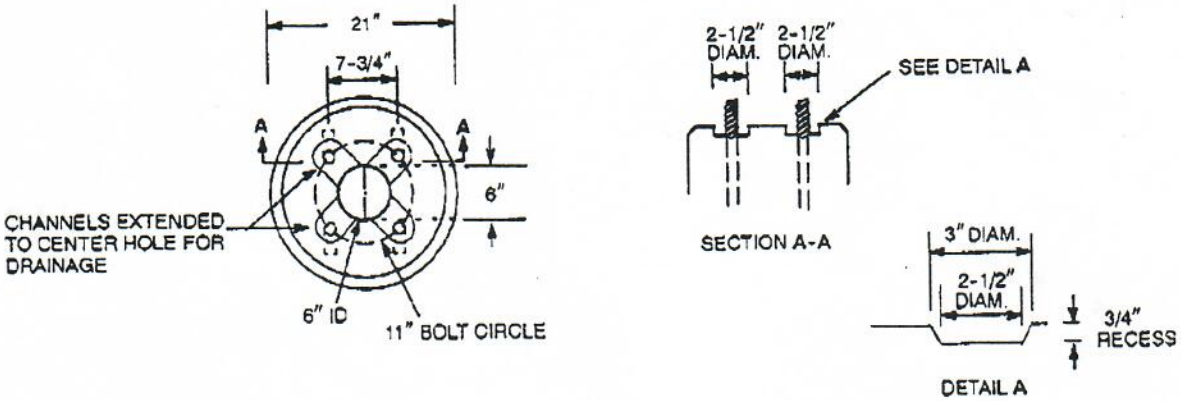


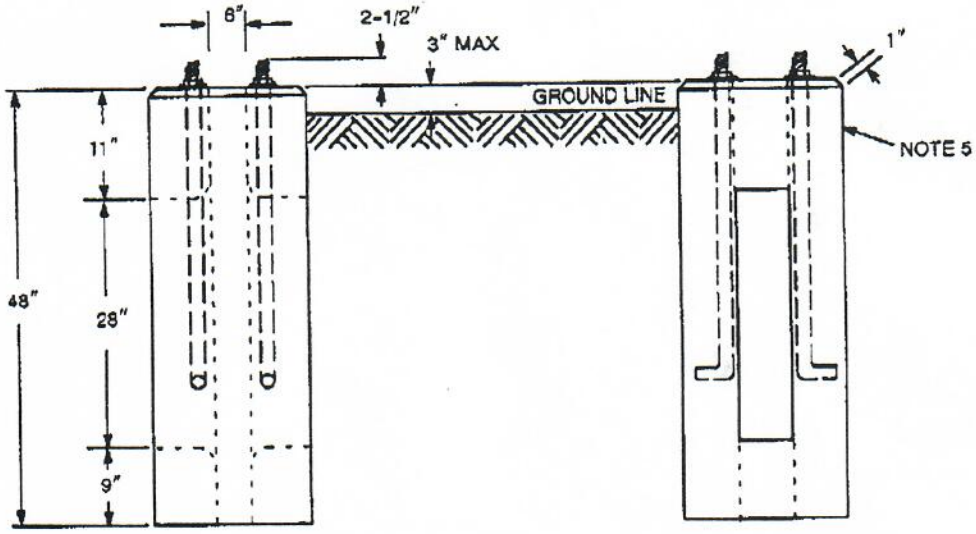


**Notes**

1. Concrete and concrete design shall be in accordance with ACI 318-1986.
2. Final 28 day concrete strength to be 5000 psi.
3. Anchor bolts to be steel per ASTM A36-1987E1, 3/4" X 24" w/3" leg, rolled threads preferred, 4" thread, w/galvanized hex nut and round flat galvanized washer. Threaded end to be galvanized a minimum of 6".
4. The 6-inch handhole at center of bolt circle projects into a 6-inch wide slot 28 inches high through the base.
5. Manufacturer's identification and month/year when manufactured shall be legibly marked in/on concrete within 3 inches of the top.
6. NUSCO **SC 0415436** shall be written on side of base with an indelible marker.

| | | | | |
|---|---|---|---|---|
| ORIGINAL | **BASE - DECORATIVE LIGHT POLE** | | | |
| APPROVED | **PRECAST CONCRETE - ROUND** | | | |
| | NORTHEAST UTILITIES | MATERIAL SPECIFICATION | **NU 2312** | **1** |

B-158